NET INSIDE CAB AREA - 27.03 SQ FT

DRAWINGS ARE FOR REFERENCE USE ONLY AND ARE NOT INTENDED FOR PURPOSES OF CONSTRUCTION.

D.B.G. = Distance between guide rails.
O/O = Out to out
W/ = with

SIDE HANDRAILS (NOT SHOWN) OPTIONAL

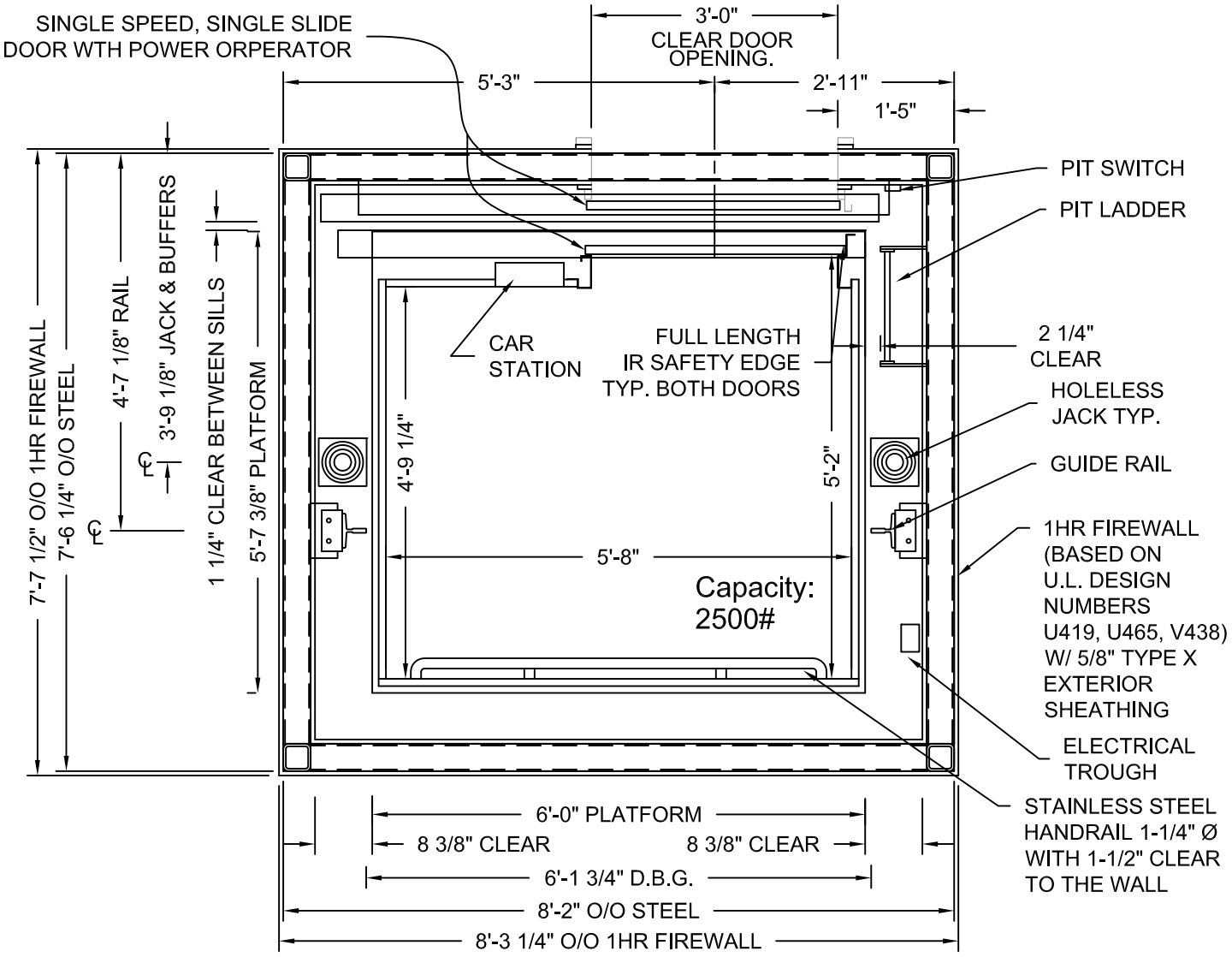

HOLELESS JACK SYSTEM SHOWN, HOLED JACK SYSTEM AVAILABLE

MODEL: AC3000/AC4000 WF

RIGHT HAND EXIT SHOWN - LEFT HAND EXIT OPPOSITE

ONE HOUR SHAFT RATING

ADA COMPLIANT

Issue Date:

PHOENIX MODULAR ELEVATOR INC.
912 SOUTH 19TH ST. MT. VERNON, ILLINOIS 62864
PHONE: (618)-244-2314 FAX: (618)-244-1923
E-mail: Info@phoenixmodularelevator.com
Web page: www.phoenixmodularelevator.com

HOISTWAY & CAR PLAN - 1HR FIRE RATED HOISTWAY

SIZE	REV	REV. DATE	FILE NO.
A			

SCALE:	DATE:	DWG NO.
1/2"=1'-0"		WF-1HR

DRAWINGS ARE FOR
REFERENCE USE ONLY AND
ARE NOT INTENDED FOR
PURPOSES OF
CONSTRUCTION.

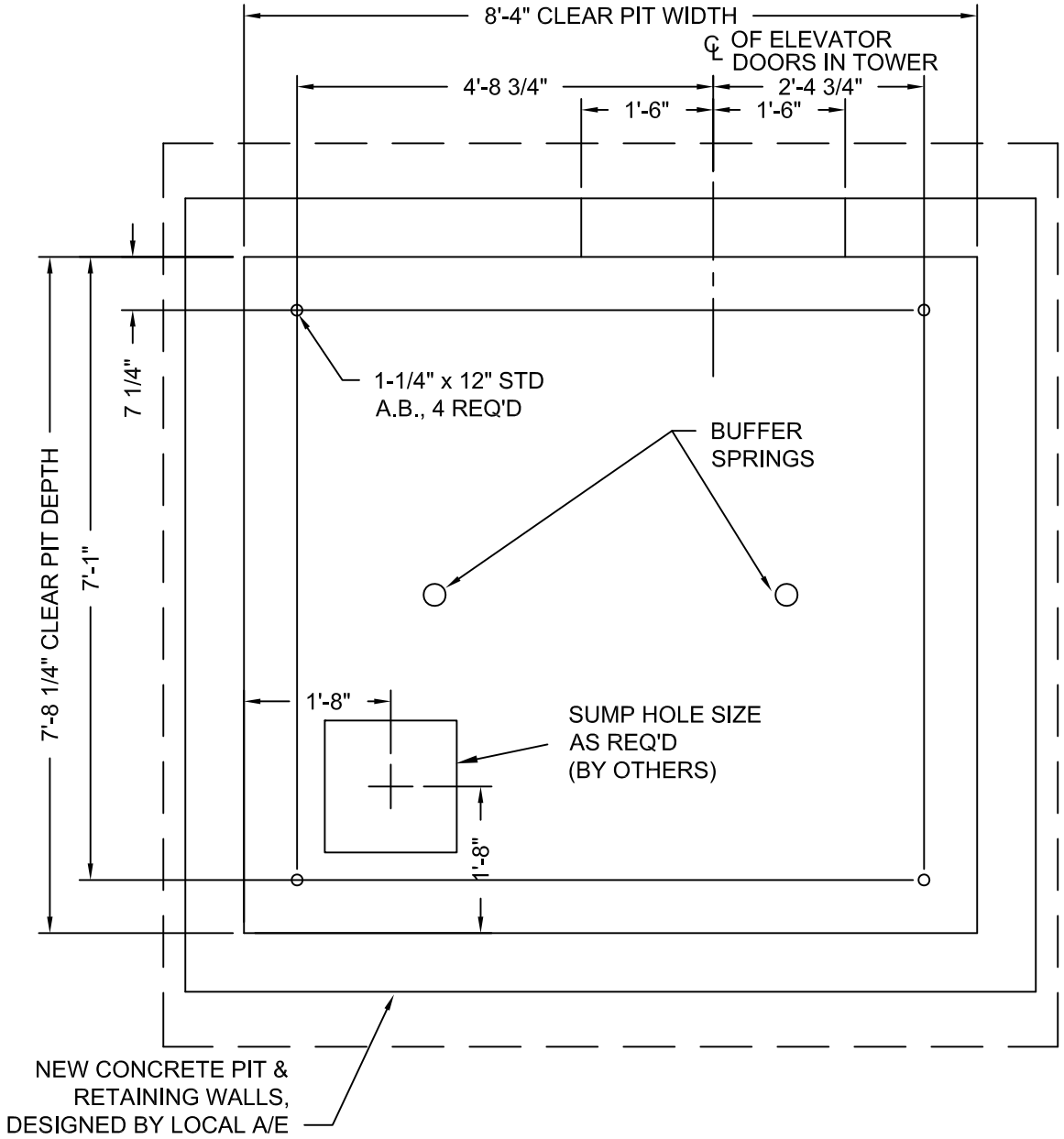

MODEL: AC3000 WF / WFR

RIGHT HAND EXIT SHOWN - LEFT HAND EXIT OPPOSITE

AC4000 TYPICALLY USES HOLED JACK. ONLY UNDER CERTAIN CIRCUMSTANCES CAN HOLELESS JACKS BE USED.

Issue Date:

PHOENIX MODULAR ELEVATOR INC.
912 SOUTH 19TH ST. MT. VERNON, ILLINOIS 62864
PHONE: (618)-244-2314 FAX: (618)-244-1923
E-mail: Info@phoenixmodularelevator.com
Web page: www.phoenixmodularelevator.com

MODEL WF / WFR PIT PLAN - HOLELESS JACKS

SIZE	REV	REV. DATE	FILE NO.
A			

SCALE:	DATE:	DWG NO.
1/2"=1'-0"		WX-P2

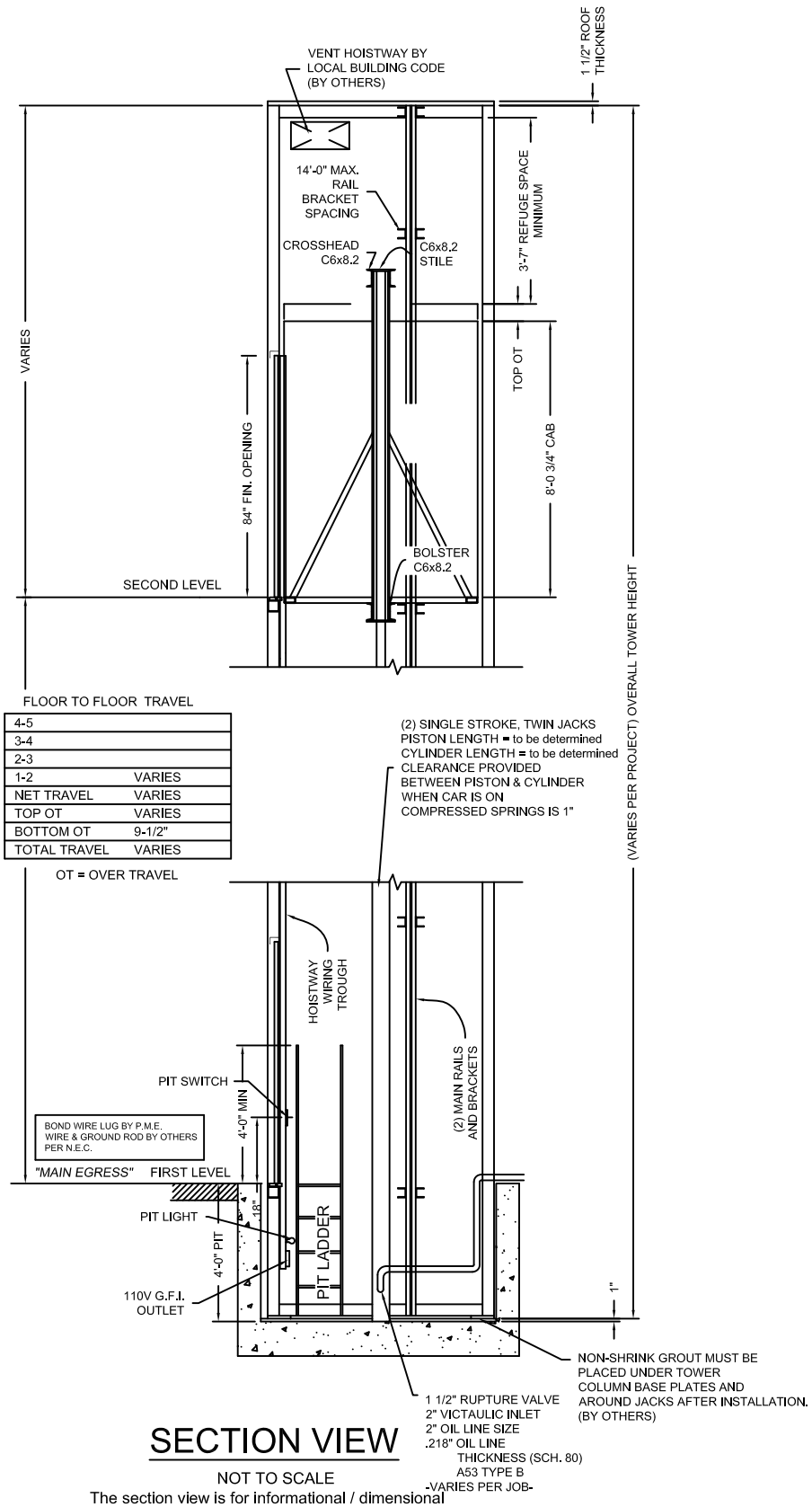

FLOOR TO FLOOR TRAVEL

4-5	
3-4	
2-3	
1-2	VARIES
NET TRAVEL	VARIES
TOP OT	VARIES
BOTTOM OT	9-1/2"
TOTAL TRAVEL	VARIES

OT = OVER TRAVEL

SECTION VIEW

NOT TO SCALE

The section view is for informational / dimensional data. See the hoistway plan view for actual equipment locations.

Issue Date:

PHOENIX MODULAR ELEVATOR INC.
912 SOUTH 19TH ST. MT. VERNON, ILLINOIS 62864
PHONE: (618)-244-2314 FAX: (618)-244-1923
E-mail: Info@phoenixmodularelevator.com
Web page: www.phoenixmodularelevator.com

SECTION VIEW FOR HOLELESS JACK SYSTEM

SIZE	REV	REV. DATE	FILE NO.
A			

SCALE:	DATE:	DWG NO.
N.T.S.		SV-TJ/TTJ

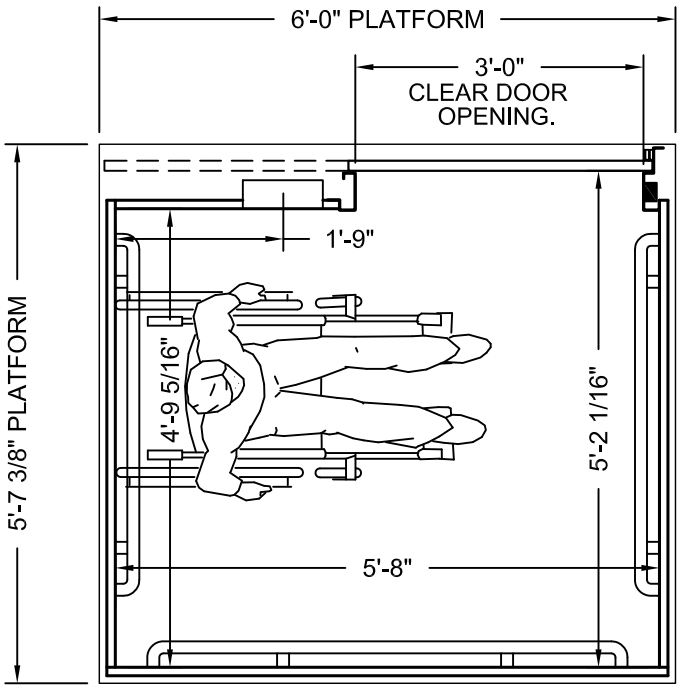

PLAN VIEW

P.M.E.'s typical front standard size elevator car.
Capacity = 2500 lbs.

Car enclosure - laminate on wood
All material for car enclosures meet the requirements of ASME A17.1 RULE 2.14.2.1

Issue Date:

PHOENIX MODULAR ELEVATOR INC.
912 SOUTH 19TH ST. MT. VERNON, ILLINOIS 62864
PHONE: (618)-244-2314 FAX: (618)-244-1923
E-mail: info@phoenixmodularelevator.com
Web page: www.phoenixmodularelevator.com

FRONT EXIT ELEVATOR CAB

SIZE	REV	REV. DATE	FILE NO.
A			

SCALE:	DATE:	DWG NO.
N.T.S.		CAB-WF-1

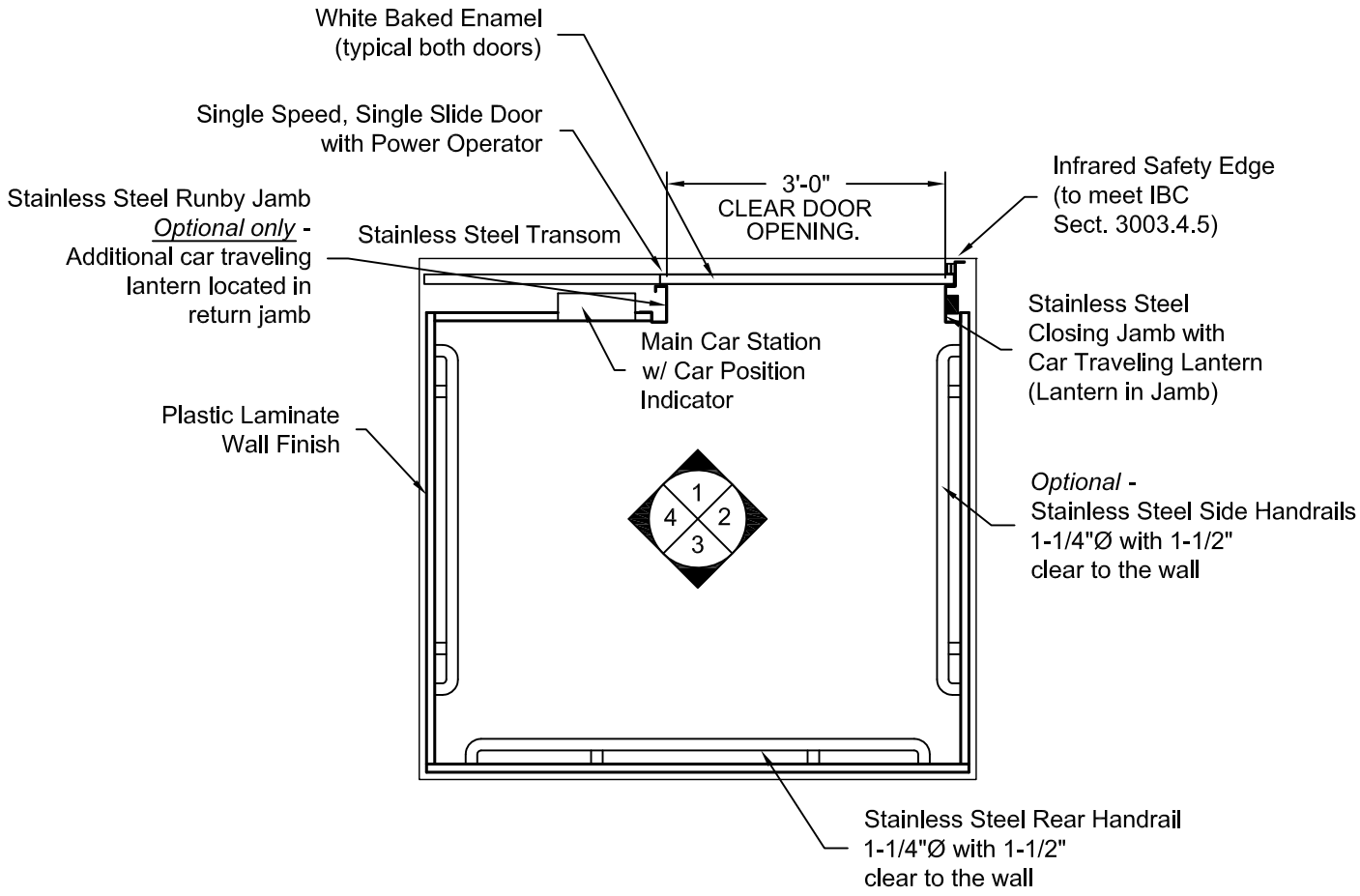

PLAN VIEW
RIGHT FRONT DOOR
(MIRROR IMAGE IS AVAILABLE)

Issue Date:

PHOENIX MODULAR ELEVATOR INC.
912 SOUTH 19TH ST. MT. VERNON, ILLINOIS 62864
PHONE: (618)-244-2314 FAX: (618)-244-1923
E-mail: info@phoenixmodularelevator.com
Web page: www.phoenixmodularelevator.com

FRONT EXIT ELEVATOR CAB - PLAN VIEW

SIZE	REV	REV. DATE	FILE NO.
A			

SCALE:	DATE:	DWG NO.
N.T.S.		CAB-WF-2

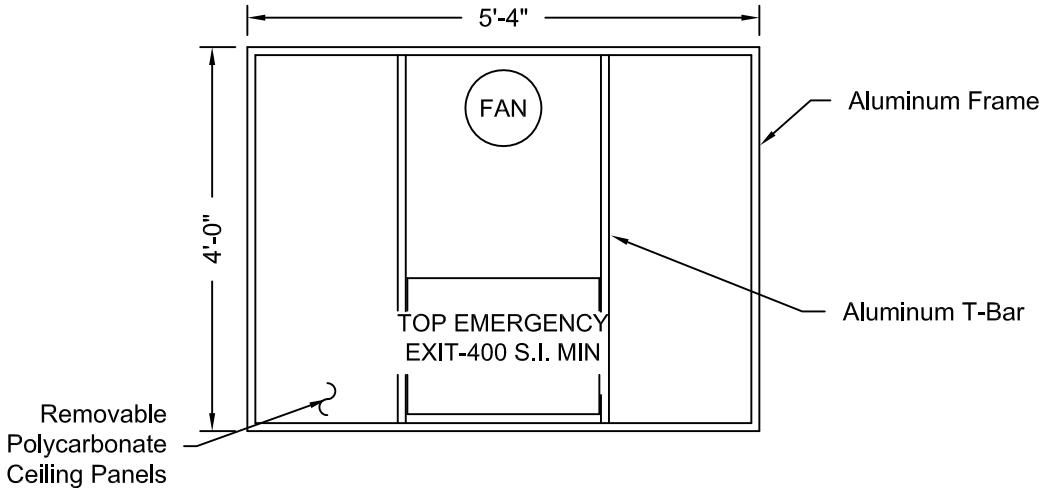

REFLECTIVE CEILING PLAN

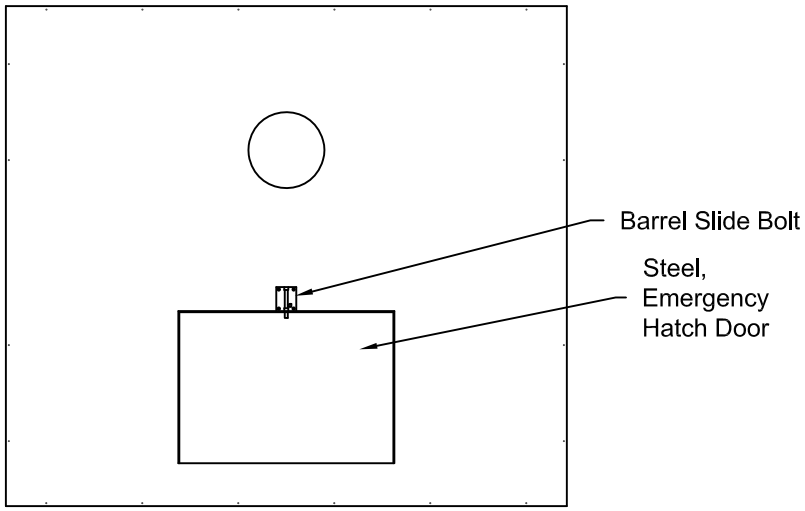

ROOF PLAN VIEW
EMERGENCY EXIT DOOR

Issue Date:

PHOENIX MODULAR ELEVATOR INC.
912 SOUTH 19TH ST. MT. VERNON, ILLINOIS 62864
PHONE: (618)-244-2314 FAX: (618)-244-1923
E-mail: info@phoenixmodularelevator.com
Web page: www.phoenixmodularelevator.com

CEILING PLAN - front exit elevator car

SIZE	REV	REV. DATE	FILE NO.
A			

SCALE:	DATE:	DWG NO.
N.T.S.		CAB-WF-3

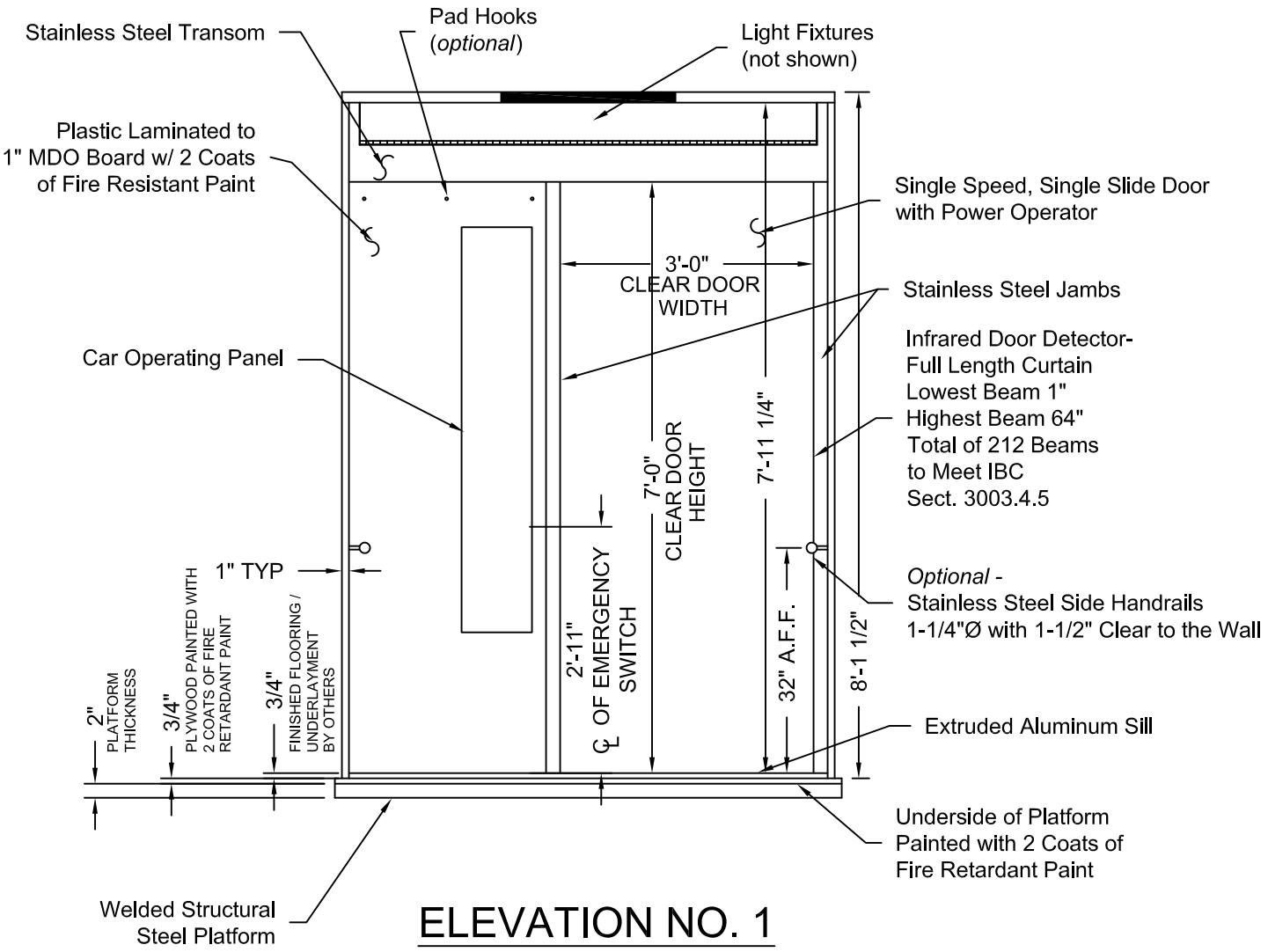

ELEVATION NO. 1

Issue Date:

PHOENIX MODULAR ELEVATOR INC.
912 SOUTH 19TH ST. MT. VERNON, ILLINOIS 62864
PHONE: (618)-244-2314 FAX: (618)-244-1923
E-mail: info@phoenixmodularelevator.com
Web page: www.phoenixmodularelevator.com

ELEVATION NO. 1 - front exit elevator car

SIZE	REV	REV. DATE	FILE NO.
A			

SCALE:	DATE:	DWG NO.
N.T.S.		CAB-WF-4

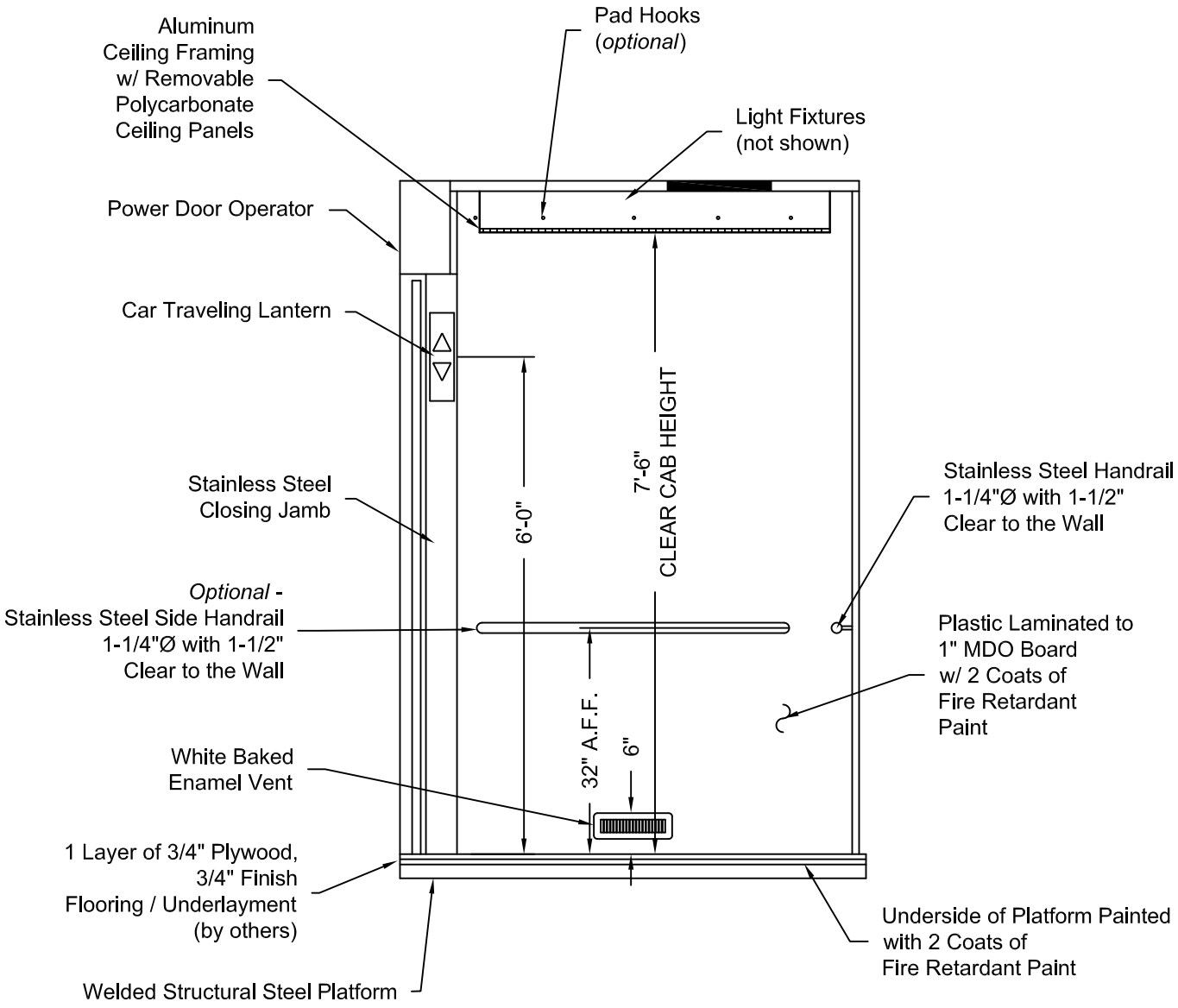

ELEVATION NO. 2

Issue Date:

PHOENIX MODULAR ELEVATOR INC.
912 SOUTH 19TH ST. MT. VERNON, ILLINOIS 62864
PHONE: (618)-244-2314 FAX: (618)-244-1923
E-mail: info@phoenixmodularelevator.com
Web page: www.phoenixmodularelevator.com

ELEVATION NO. 2 - front exit elevator car

SIZE	REV	REV. DATE	FILE NO.
A			

SCALE:	DATE:	DWG NO.
N.T.S.		CAB-WF-5

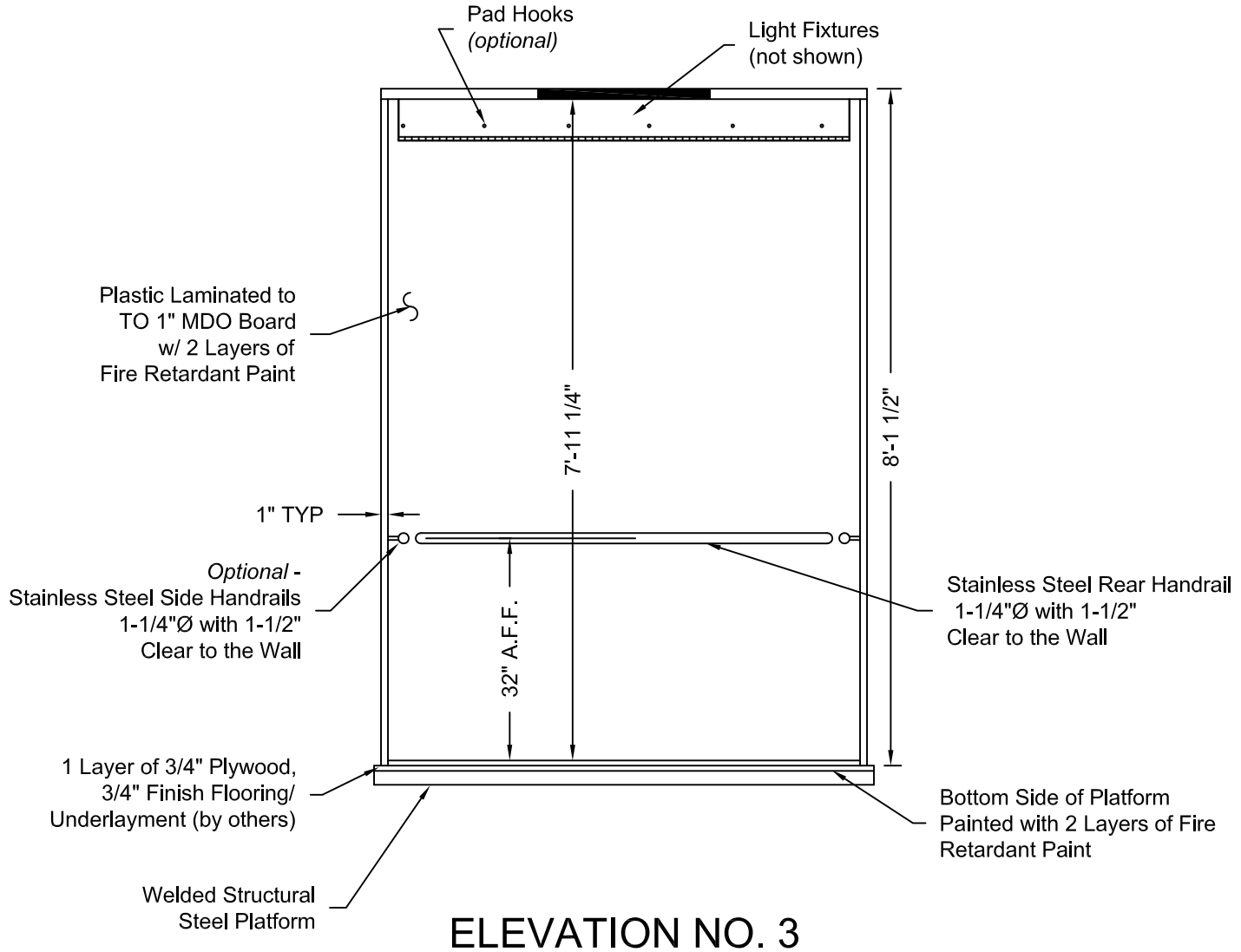

ELEVATION NO. 3

Issue Date:

PHOENIX MODULAR ELEVATOR INC.
912 SOUTH 19TH ST. MT. VERNON, ILLINOIS 62864
PHONE: (618)-244-2314 FAX: (618)-244-1923
E-mail: info@phoenixmodularelevator.com
Web page: www.phoenixmodularelevator.com

ELEVATION NO.3 - front exit elevator car

SIZE	REV	REV. DATE	FILE NO.
A			

SCALE:	DATE:	DWG NO.
N.T.S.		CAB-WF-6

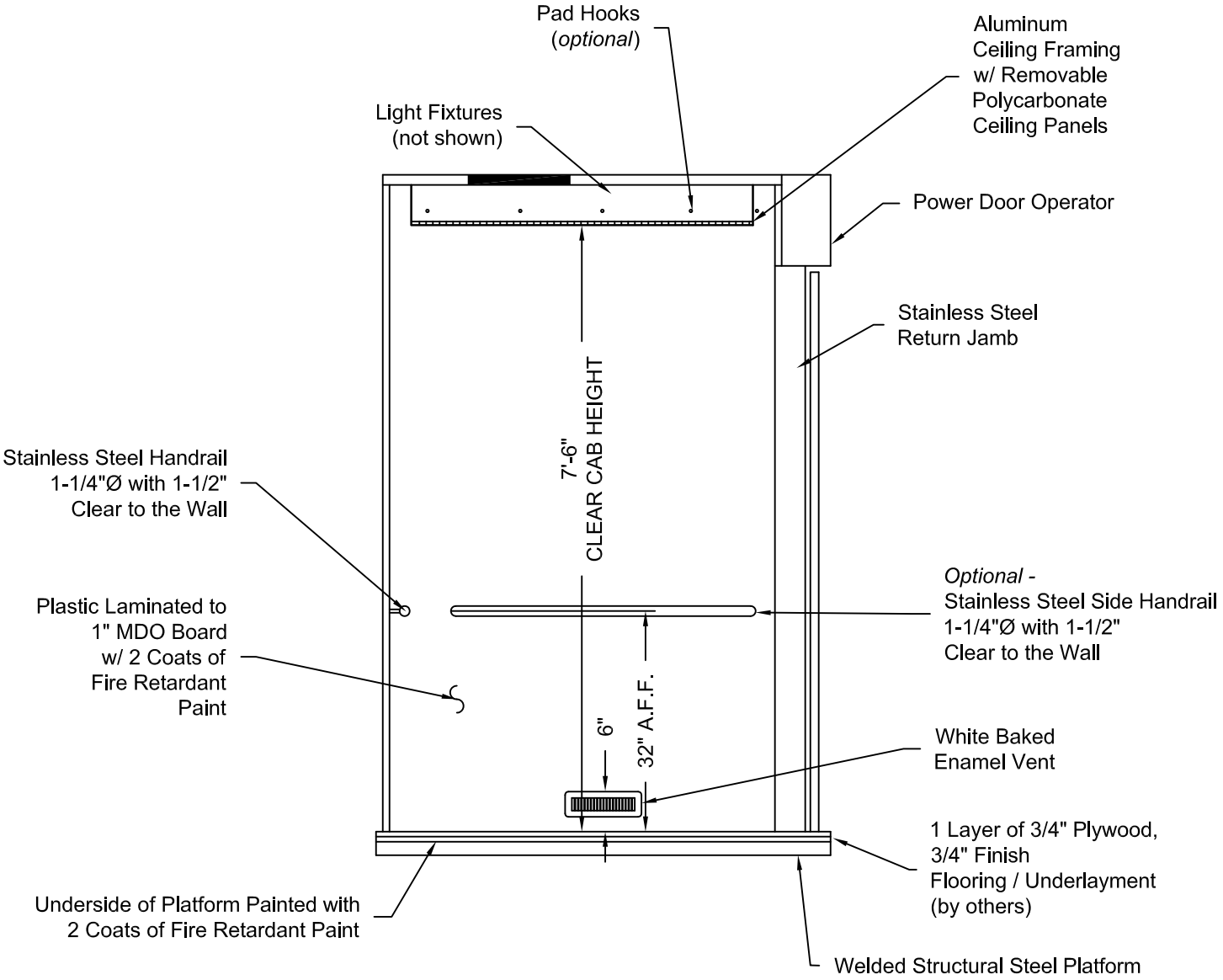

ELEVATION NO. 4

Issue Date:

PHOENIX MODULAR ELEVATOR INC.
912 SOUTH 19TH ST. MT. VERNON, ILLINOIS 62864
PHONE: (618)-244-2314 FAX: (618)-244-1923
E-mail: info@phoenixmodularelevator.com
Web page: www.phoenixmodularelevator.com

ELEVATION NO. 4 - front exit elevator car

SIZE	REV	REV. DATE	FILE NO.
A			

SCALE:	DATE:	DWG NO.
N.T.S.		CAB-WF-7